Yttemperaturgivare anliggningstemperatur t ⩽ 150 °C

Användningsområde

För mätning av yttemperaturen på rör, tankar eller liknande. Monteras antingen genom fastgängning med M3-skruv eller med rostfritt band och bandlås.
Se avsnitt "Tillbehör".

Mätkropp

Material i mässing, 5 x 5 x 25 mm.

Mätelement

Mätelement med noggrannhet enligt IEC 60751 placerat i anliggningskroppen som är fylld med värmeledande pasta för snabb svarstid och för skaksäker design.
Anslutnings-kabel med ETFE-isolering.

Processtemperatur

-50...+150 °C

Kapslingsklass

IP 54

För inkoppling, se sida 154.

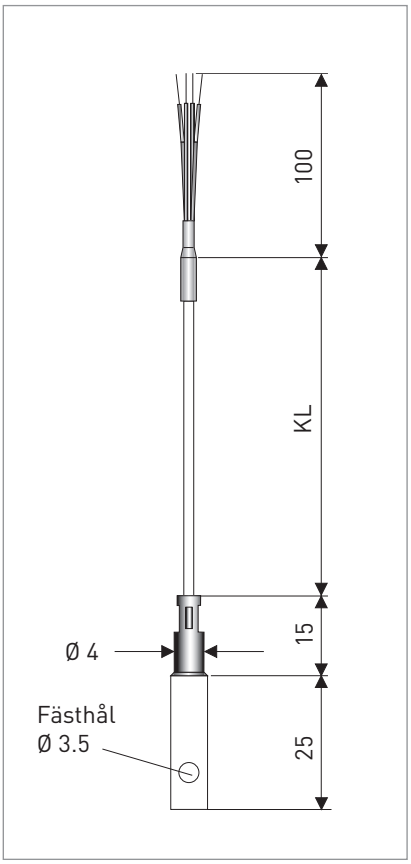

Dimensioner i mm

Beställningskod för TRA-W20 med standardinställningar

V	T	E	2	4	2	0	4	3	2	2	4	0	0	4	1	0	0	0	0	0	0	0	0	0	0	0	0
								4				8															

Detta är ett urval av de valmöjligheter som finns för denna givare. För komplett beställningskod se sidan 80.

4. MÄTELEMENT

3	1x Pt100	4-tråd
N	1x Pt1000	4-tråd

8. PROCESSANSLUTNING

0	Utan
5	Rostfritt band med bandlås

Type code for industrial thermometers

VTE2 4

1. Type version

1	TRA-W 10	"cable, plug-in" (RKS)	**4**	TRA-W 40	"cable, surface", (RZS)	**7**	TRA-W 70	"cable, bayonet", (RTS)
2	TRA-W 20	"cable, surface", (RYS)	**5**	TRA-W 50	"cable, screw-in", (RLS)	**8**	TRA-W 80	"harsh cable plug-in)
3	TRA-W 30	"cable, surface", (RYT)	**6**	TRA-W 60	"oil-tight surface", (RLO)	**A**	TRA-W 90	"high temp. Cable plug-in), (RMK)

2. Certificate

0	without
1	Simpel Apparatus according to ATEX directives

3. Cable material

1	PVC	70°C	**3**	MFA / PFA	200°C	**5**	ELAX / PTFE	105°C	4-wire
2	Silicon	150°C	**4**	ETFE / KAPT	150°C	**6**	TPEV	105°C	4-wire

4. Measuring insert = sensor / wiring

1	1x Pt100	2-wire	**4**	2x Pt100	2-wire	**M**	1x Pt1000	3-wire
2	1x Pt100	3-wire	**5**	2x Pt100	3-wire	**N**	1x Pt1000	4-wire
3	1x Pt100	4-wire						

5. Measuring insert / tolerance class

2	Cl. A	TF	(tolerance class -30 ... +300°C)	**4**	Cl. A	WW	(tolerance class -100 ... +450°C)

6. Thermowell material

1	1.4404 316L	**2**	Brass	**3**	Copper	**4**	PTFE/Copper

7. Protection tube size

0	Ø 3 x 0,5 mm	**4**	Block 5 x 5 x 25 mm	**7**	Bolt M6	**A**	Ø 6 x 12,9 mm SS
1	Ø 6 x 0,5 mm	**5**	Block 26 x 18 x 50 mm	**8**	Bolt M8	**P**	Form 4, Ø24 mm
2	Ø 8 x 0,5 mm	**6**	Block 8 x 10 x 40 mm				

8. Process connection

0	without	**5**	Mounting Band, DN300 (1000 mm)
1	Compression fitting G1/8" SS	**7**	Bayonet fitting M12x1
2	Compression fitting G1/4" SS	**8**	Bayonet fitting M12x1,75
3	Compression fitting G1/2" SS	**S**	Compression fitting 1/2" NPT SS
4	Compression fitting G1/4" Brass	**F**	Mounting flange

9. Thermowell

0	without	**1**	tube G1/2 Ø 8 x 1 L=75 mm	**2**	tube G1/2 Ø 8 x 1 L=175 mm	**3**	tube G1/2 Ø 8 x 1 L=275

10. Immersion length

0	13,5 mm	**5**	30 mm	**C**	200 mm	**M**	Form 4 D1 140/65 mm
2	15 mm	**6**	50 mm	**D**	300 mm	**N**	Form 4 D2 200/125 mm
3	20,2 mm	**A**	100 mm	**E**	400 mm	**P**	Form 4 D4 200/65 mm
4	25 mm	**B**	150 mm	**F**	500 mm	**R**	Form 4 D5 260/125 mm

11. Cable length

1	0,5 m	**6**	4,0 m	**C**	9,0 m	**H**	25 m
2	1,0 m	**7**	5,0 m	**D**	10,0 m	**K**	30 m
3	1,5 m	**8**	6,0 m	**E**	12,0 m	**L**	40 m
4	2,0 m	**A**	7,0 m	**F**	15,0 m	**M**	50 m
5	3,0 m	**B**	8,0 m	**G**	20,0 m	**Z**	customised lengths

13. Type of connection / rail mounted transmitter

0	without			
L	with rail mounted transmitter	// APAQ R130	Basic, RTD	
A	with rail mounted transmitter	// IPAQ-4L	Universal, 90 - 250 VAC	
B	with rail mounted transmitter	// IPAQ-4L	Universal, 20 - 30 VDC	
C	with rail mounted transmitter	// IPAQ R330	Universal	[Ex]
H	with rail mounted transmitter	// IPAQ R520	Smart, HART, SIL2	[Ex]
M	with rail mounted transmitter	// IPAQ R530	Smart, HART	[Ex]

14. Measuring range

0	without	**3**	-50…+100°C	**6**	0…+100°C
1	Customized Configuration	**4**	-50…+150°C	**7**	0…+150°C
2	-50…+50°C	**5**	0…+50°C	**8**	0…+200°C

15. Calibration report

0*	without		
	Sensor calibration		
1	1-point	(single)	room temperature
P	2-point	(single)	0°, 100°C
R	2-point	(double)	0°, 100°C
2	2-point	(single)	0%, 100% of range
3	2-point	(double)	0%, 100% of range
S	3-point	(single)	0°, 50°, 100°C
T	3-point	(double)	0°, 50°, 100°C
4	3-point	(single)	0%, 50%, 100% of range
5	3-point	(double)	0%, 50%, 100% of range
6	customised (single)		
7	customised (double)		
	Sensor + Transmitter calibration		
A	2-point	(single)	0%, 100% of range
B	3-point	(single)	0%, 50%, 100% of range
C	5-point	(single)	0%, 25%, …, 100% of range
	Sensor + Transmitter calibration with error correction		
E	2-point	(single)	0%, 100% of range
F	3-point	(single)	0%, 50%, 100% of range
G	5-point	(single)	0%, 25%, …, 100% of range
H	customised		

Vissa kombinationer är inte möjliga. Vänligen kontakta KROHNE Inor för ytterligare information.

KOMPLETT BESTÄLLNINGSNYCKEL

VTE2	4												0				

16. Test certificate

0	without	
1	Declaration of compliance with order 2.1 according to EN 10204	

18. Material certification

0	without	
1	Material certificate 3.1 according to EN 10204	[80]

19. Marking

0	without	
1	Stainless steel tag plate	(40 x 20 mm)
2	Stainless steel tag plate	(120 x 46 mm)

20. Operating instructions

0	without
1	German
3	English
4	French
5	Spanich
G	German/English

VTE2	4												0					0				1	0	0	**Order code**

Exempel konfigurering
VTE2410232110067000000000010

Kabel gibare

Pt100 class A 4-tråds tunnfilm mär element
Ø6 x 50 mm skydsrör i EN 1.4404 stål
Levereras med en 5m lång silikon kabel

4 = utökat standardutbud

* Standard

Vissa kombinationer är inte möjliga. Vänligen kontakta KROHNE Inor för ytterligare information.